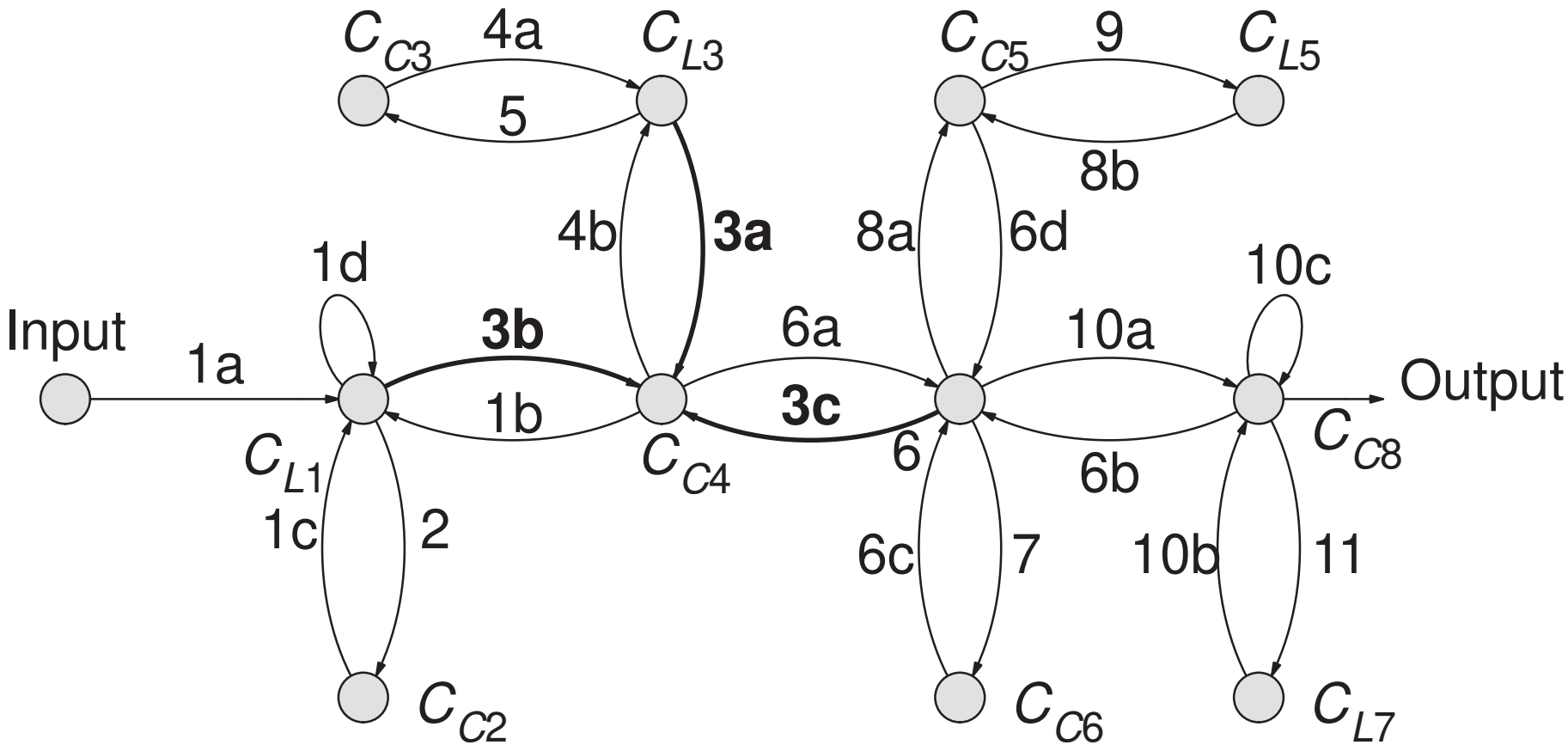Analogix
CORPORATION