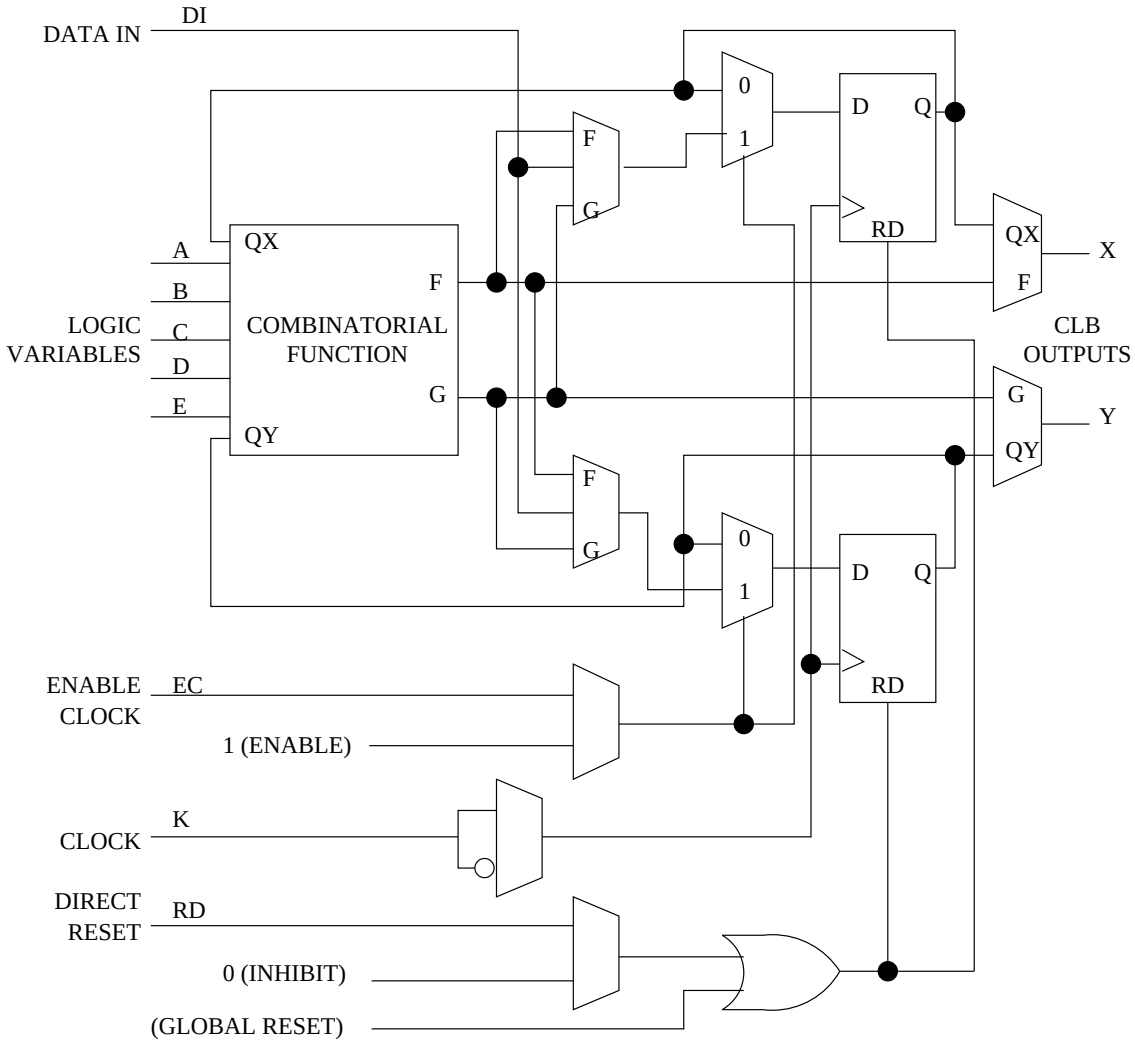
DATA IN
DI
0
1
D
Q
F
G
RD
QX
X
A
B
LOGIC
VARIABLES
C
D
E
QX
F
COMBINATORIAL
FUNCTION
G
QY
CLB
OUTPUTS
G
Y
QY
F
G
0
1
D
Q
RD
ENABLE
CLOCK
EC
1 (ENABLE)
CLOCK
K
DIRECT
RESET
RD
0 (INHIBIT)
(GLOBAL RESET)