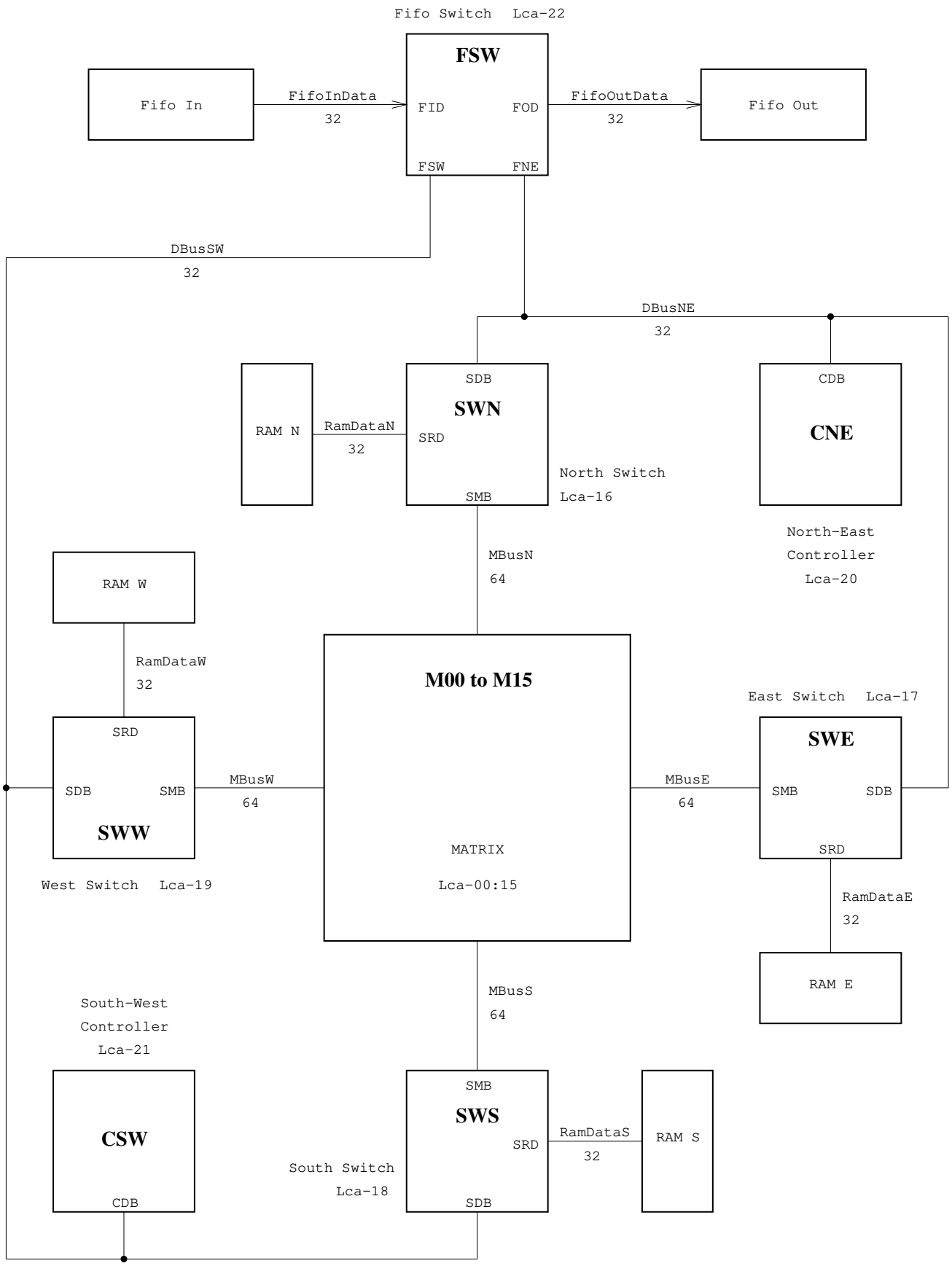
Fifo Switch Lca-22
FSW
Fifo In
FifoInData
32
FID
FOD
FifoOutData
32
Fifo Out
FSW
FNE
DBusSW
32
DBusNE
32
SDB
SWN
RAM N
RamDataN
32
SRD
SMB
North Switch
Lca-16
CDB
CNE
North-East
Controller
Lca-20
MBusN
64
RAM W
RamDataW
32
M00 to M15
East Switch Lca-17
SRD
SWE
SDB
SMB
MBusW
64
MBusE
64
SMB
SDB
SWW
MATRIX
Lca-00:15
SRD
West Switch Lca-19
RamDataE
32
RAM E
MBusS
64
South-West
Controller
Lca-21
SMB
SWS
CSW
RamDataS
32
RAM S
SRD
South Switch
Lca-18
CDB
SDB