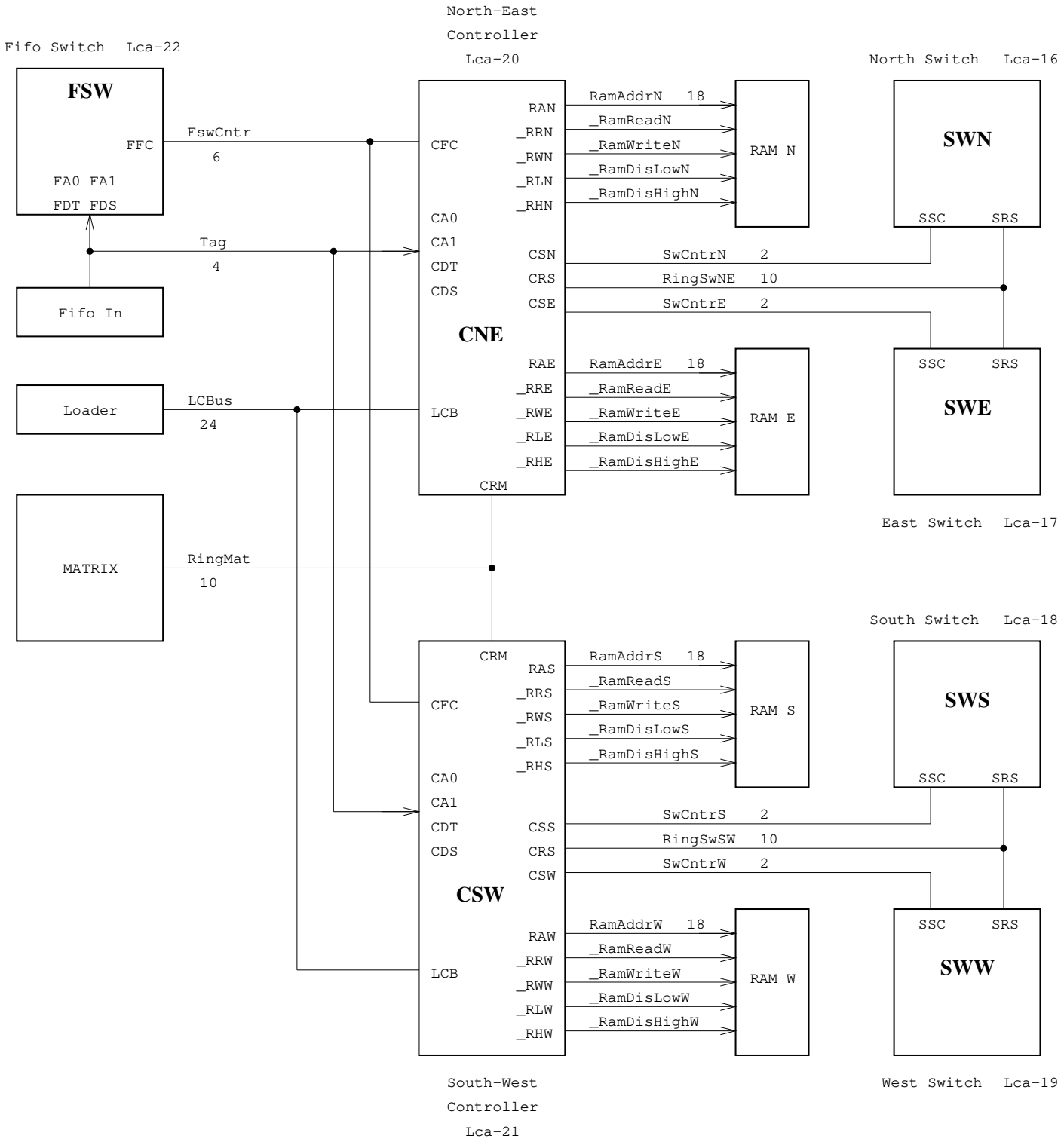
Fifo Switch Lca-22
FSW
FFC
FA0 FA1
FDT FDS
FswCntr
6
Tag
4
Fifo In
Loader
LCBus
24
MATRIX
RingMat
10
North-East
Controller
Lca-20
CFC
CA0
CA1
CDT
CDS
LCB
CRM
RAN
_RRN
_RWN
_RLN
_RHN
CSN
CRS
CSE
CNE
RAE
_RRE
_RWE
_RLE
_RHE
RamAddrN 18
_RamReadN
_RamWriteN
_RamDisLowN
_RamDisHighN
RAM N
SwCntrN 2
RingSwNE 10
SwCntrE 2
RamAddrE 18
_RamReadE
_RamWriteE
_RamDisLowE
_RamDisHighE
RAM E
North Switch Lca-16
SWN
SSC SRS
SSC SRS
SWE
East Switch Lca-17
South Switch Lca-18
CRM
RAS
_RRS
_RWS
_RLS
_RHS
RamAddrS 18
_RamReadS
_RamWriteS
_RamDisLowS
_RamDisHighS
RAM S
SWS
SSC SRS
CFC
CA0
CA1
CDT
CDS
LCB
CSS
CRS
CSW
CSW
SwCntrS 2
RingSwSW 10
SwCntrW 2
RAW
_RRW
_RWW
_RLW
_RHW
RamAddrW 18
_RamReadW
_RamWriteW
_RamDisLowW
_RamDisHighW
RAM W
SSC SRS
SWW
South-West
Controller
Lca-21
West Switch Lca-19