Voltage Drops Around Closed Loops

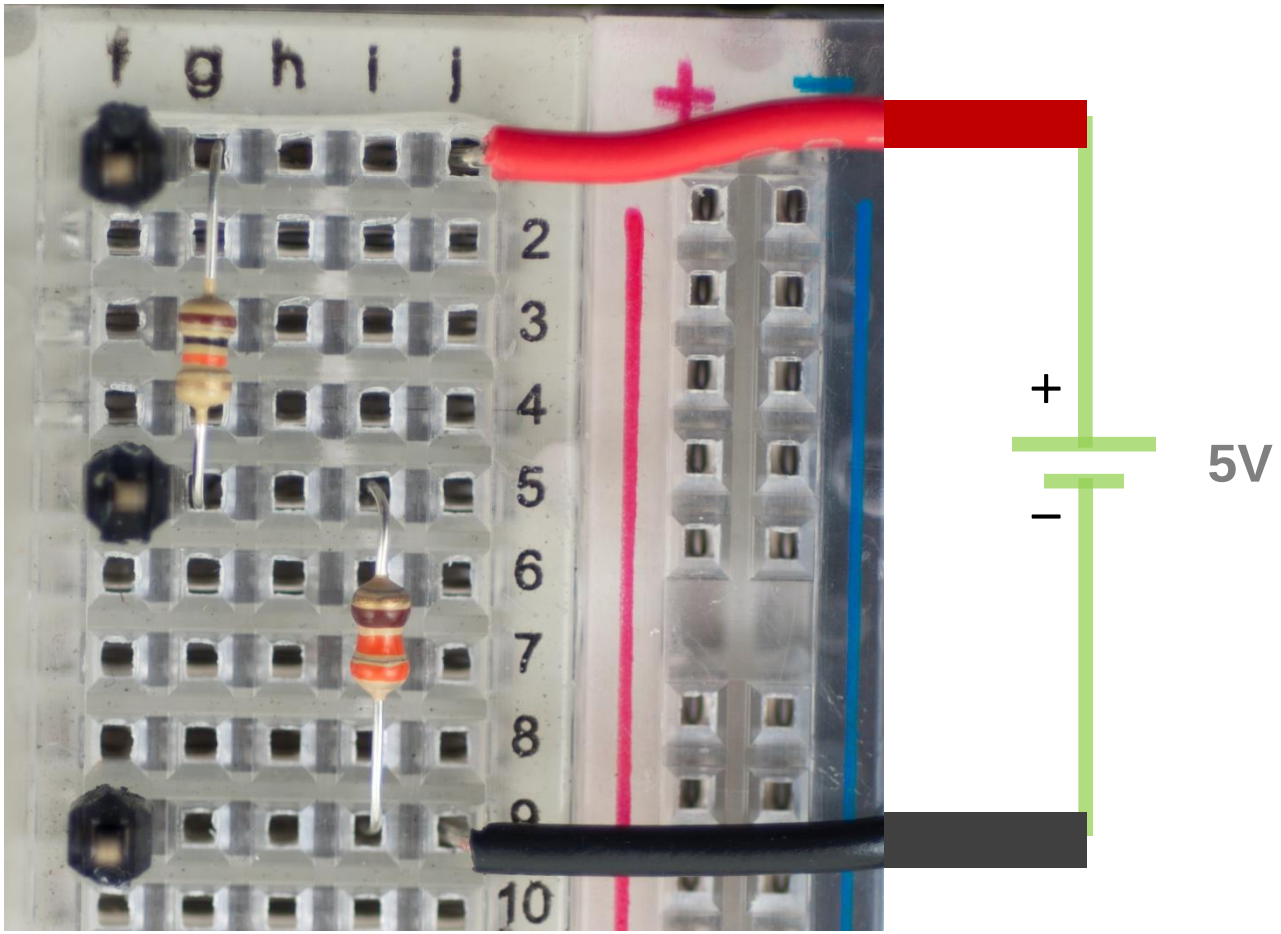

Select Resistors

Find the 10kΩ and the 330Ω resistors from your parts kit.

color	digit
black	0
brown	1
red	2
orange	3
yellow	4
green	5
blue	6
violet	7
gray	8
white	9

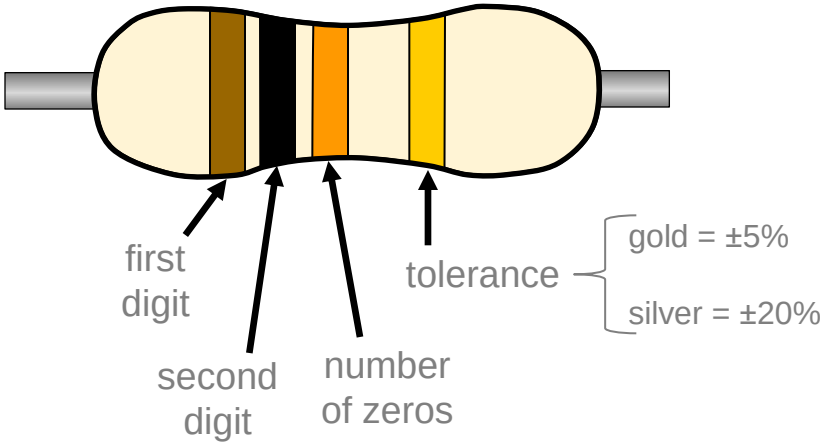

Example: 10kΩ resistor

1 = brown
0 = black
Add 3 zeros, so 3 = orange

So, 10kΩ = brown black orange

Now, find the 330Ω resistor.

Build the Series Circuit Below

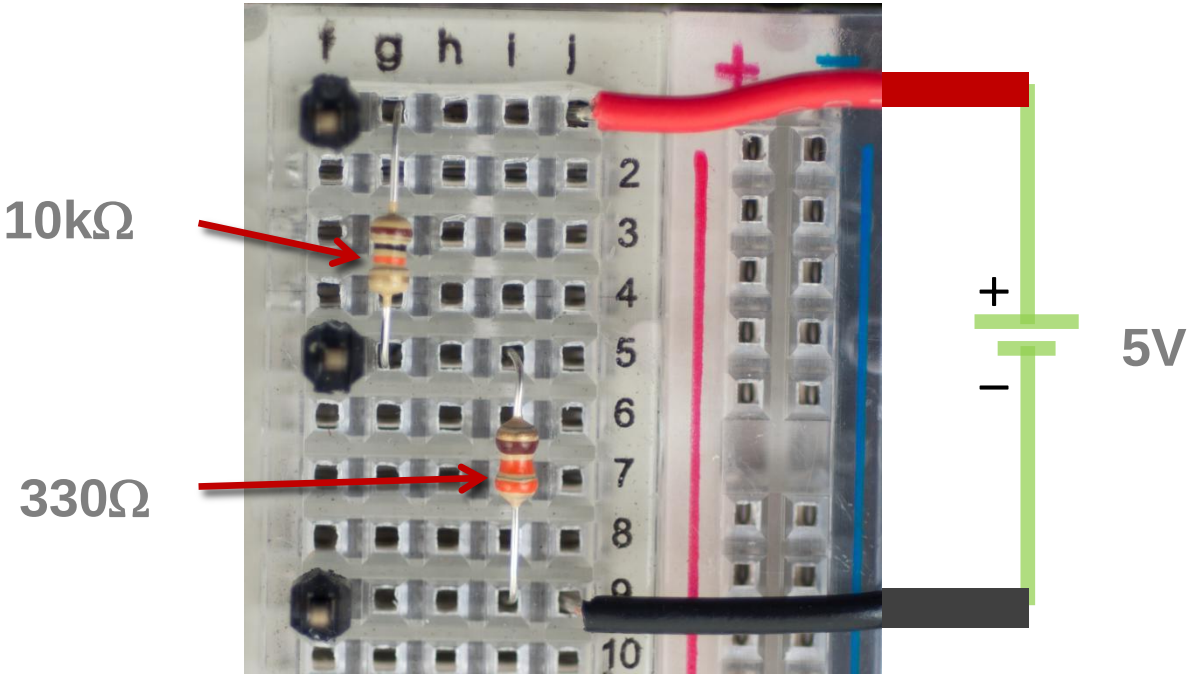

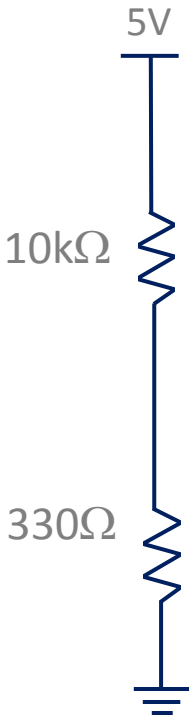

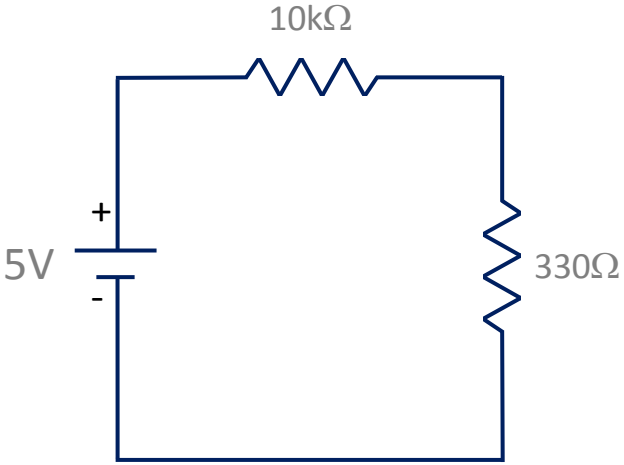

All of these circuits are the SAME!!

Compute the Voltage Drops Across the Two Resistors

Use Ohm's Law: $V = I \cdot R$

given

$R_1 = 10k\Omega$ $R_2 = 330\ \Omega$ $V_1 = 5V$

find the equivalent resistance

$R_{eq} =$

find the current

$I =$

find the voltage drop across R_1

$V_{R_1} =$

find the voltage drop across R_2

$V_{R_2} =$

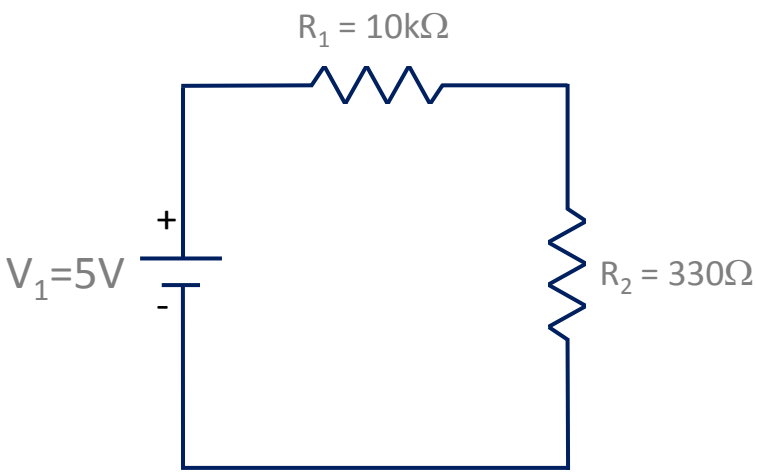

Now, add the voltage rise of the power source (+5V) to the voltage drops across the resistors (negative numbers).

Use Multimeter to Measure Voltages Around Loop

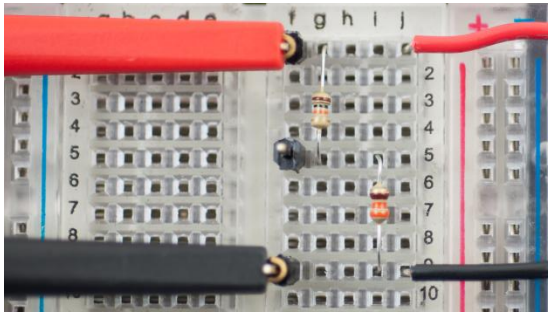

(1) From 5V pin to Gnd

ΔV_1 = _____

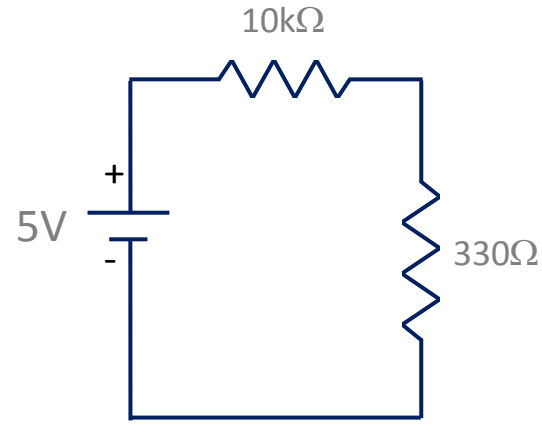

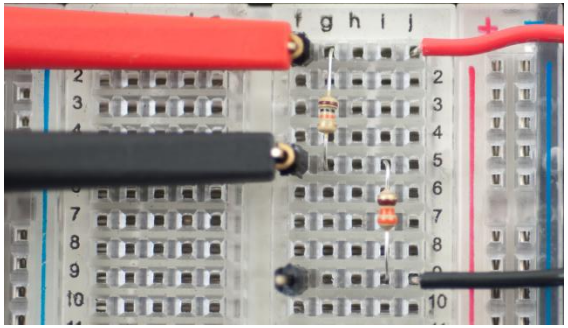

(2) Across the 10kΩ resistor

ΔV_2 = _____

Remember . . .
a RESISTOR is a voltage DROP and
a POWER SOURCE is a voltage RISE

$$\Delta V_1 - \Delta V_2 - \Delta V_3 = \_\_\_\_\_$$

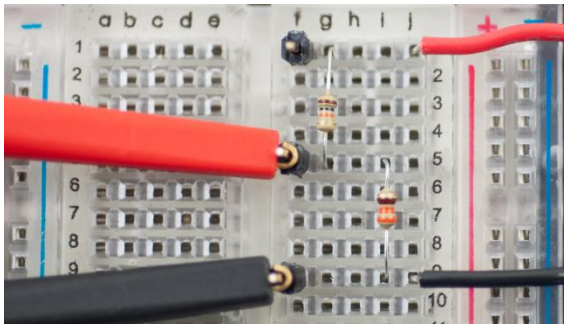

(3) Across the330Ω resistor

ΔV_3 = _____

rises must balance drops!!!!

Compare Measurements to Theory

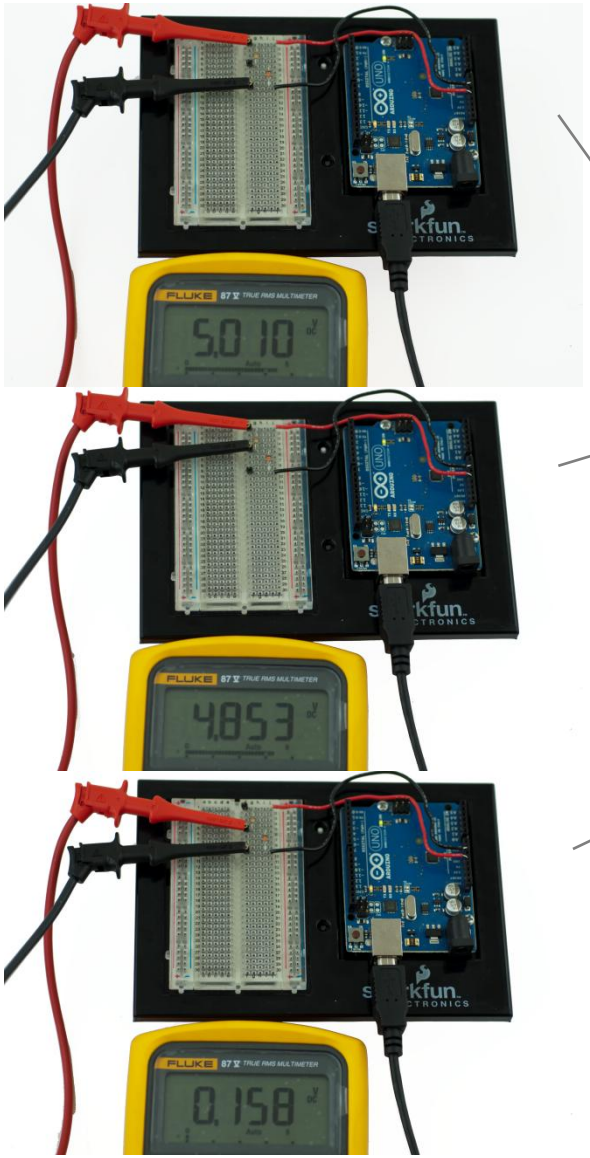

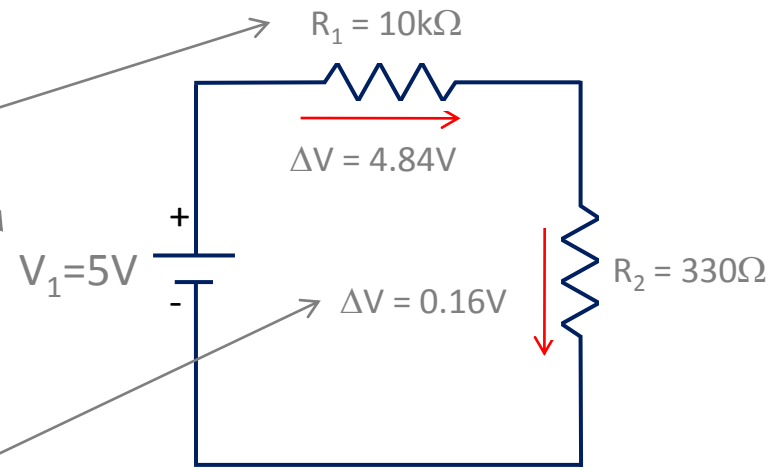

Pretty close!

Kirchoff's Voltage Law (KVL)

Kirchoff's Voltage Law says that the algebraic sum of voltages around any closed loop in a circuit is zero – we see that this is true for our circuit. It is also true for very complex circuits.

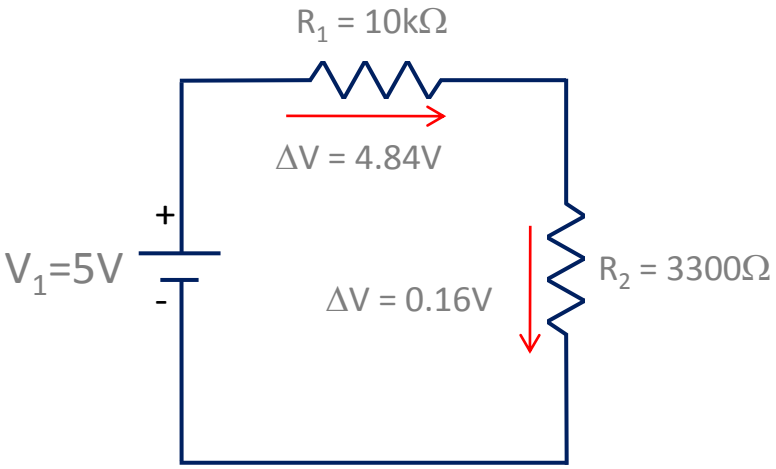

$$5V - 4.84V - 0.16V = 0$$

Notice that the 5V is DIVIDED between the two resistors, with the larger voltage drop occurring across the larger resistor.

Gustav Kirchoff (1824 – 1887) was a German physicist who made fundamental contributions to the understanding of electrical circuits and to the science of emission spectroscopy. He showed that when elements were heated to incandescence, they produce a characteristic signature allowing them to be identified. He wrote the laws for closed electric circuits in 1845 when he was a 21 year-old student.