INT. J. ELECTRONICS, 1995, VOL. 79, NO. 5, 551–559

Application of Sign Haar Transform in a ternary communication system

SUSANTO RAHARDJA† and BOGDAN J. FALKOWSKI†

We consider the application of a novel Sign Haar Transform in designing a digital communication system. The nonlinear transform converts binary/ternary vectors into digital spectral domain and is invertible. With its unique and isomorphic properties, the Sign Haar Transform is suitable for security coding in a communication system. Ternary amplitude frequency shift keying (TAFSK) is proposed for the implementation of the system. Power spectral density of the resultant signalling is formulated and analysed. The non-coherent receiver is designed and proposed as a ternary communication system.

1. Introduction

Discrete transformations have been extensively used in the areas of control, communication, digital logic and digital signal processing with particular applications in picture processing and pattern recognition (Stojic *et al.* 1993, Yaroslavsky 1985, Zalmanzon 1989). Most of these transformations are canonical and orthogonal, though there exist some non-orthogonal digital transformations which also find application in logic design (Stojic *et al.* 1993). Recently, a new ternary quantized transform called the Sign Haar Transform was introduced by Falkowski and Rahardja (1994). The transform exhibits a nonlinear property. Essentially, it transforms binary/ternary data into a ternary spectrum. Though nonlinear, the transform is unique and hence invertible. With its intrinsic coding property, the transform reveals a possible application in a secured digital communication system. Another important property of the Sign Haar Transform is that the computer memories required to store both functional and spectral data are exactly the same, since they operate on ternary values. This is in marked contrast to traditional Haar spectrum, where signs together with magnitudes need to be stored in spectral domain (Stojic *et al.* 1993, Yaroslavsky 1985, Zalmanzon 1989). Hence for the traditional Haar transform, the storage requirements in the spectral domain versus the functional domain are significantly increased for binary/ternary data signals

In this paper the use of the Sign Haar Transform in designing a ternary digital communication system is considered. The incoming binary/ternary data are encoded by performing the Sign Haar Transform. The resultant ternary signal is modulated into a high-frequency carrier using ternary amplitude frequency shift keying (TAFSK) signalling.

2. General definitions of Sign Haar Transform

S-coding is frequently used to represent boolean functions when different spectra of such functions are calculated. The truth vector for *S*-coding is represented in the

Received 10 May 1995; accepted 22 May 1995.

†School of Electrical and Electronic Engineering, Nanyang Technological University, Nanyang Avenue, Singapore 2263. Tel: +(65) 799 1327; Fax: +(65) 791 2687; e-mail: bogdan @ntu.ac.sg.

following way: the true minterms (minterms for which boolean function has logical values 1) are denoted by -1, false minterms (minterms for which boolean function has logical values 0) by $+1$, and 'don't care' minterms (minterms for which boolean function can have arbitrary logical values 0 or 1) by 0. Hence, binary vectors formed of only $\{+1, -1\}$ represent logical values of completely specified boolean functions, and those formed of $\{+1, 0, -1\}$ represent the values of incompletely specified boolean functions. In what follows, to shorten the notation, functional and spectral data will be represented by either $\{+,-\}$ or $\{+,0,-\}$. The data in the functional domain can be arbitrary binary/ternary vectors or S-coded completely (binary) or incompletely (ternary) specified boolean functions. The following symbols will be used: let $R_1=\{+,-\}$, $R_2=\{+,0,-\}$, and let R_l^n mean the n-space cartesian product of a set R_l, $(l=1,2)$.

Definition 1

An n variable S-coded completely specified boolean function is the mapping $f_1: R_1^n \rightarrow R_1$.

Definition 2

An n variable S-coded incompletely specified boolean function is the mapping $f_2: R_1^n \rightarrow R_2$.

Definition 3

An invertible Sign Haar Transform h and its inverse transform h^{-1} are the mappings $h: R_2^{2^n} \rightarrow R_{2(h)}^{2^n}$ and $h^{-1}: R_{2(h)}^{2^n} \rightarrow R_2^{2^n}$. In the above equations, the symbol $R_{2(h)}^{2^n}$ represents a set with the elements from $R_2^{2^n}$ permuted by the mapping h of all the elements of the set $R_2^{2^n}$. When only completely specified boolean functions are considered, the symbol $R_2^{2^n}$ is replaced with $R_1^{2^n}$ and $R_{2(h)}^{2^n}$ with $R_{1(h)}^{2^n}$, where the latter represents a proper subset of set $R_{2(h)}^{2^n}$ generated by the h mapping of all the elements of the set $R_1^{2^n}$. In order to obtain the sign Haar spectrum h (an element of the set $R_{2(h)}^{2^n}$), and its inverse (a corresponding element of the original data set $R_2^{2^n}$), the results of each Fast or Inverse Haar butterfly block are quantized first. In the above equations, the cardinality of the original data set $R_2^{2^n}$ and its transformed spectrum $R_{2(h)}^{2^n}$ is equal to 3^{2^n}.

When some permutation is performed on the elements of the set $R_2^{2^n}$ the same permutation happens to the elements in $R_{2(h)}^{2^n}$ spectrum of the original set. Fast flow diagrams for the calculation of forward and the inverse Sign Haar Transform h are shown for $N=8$ in Figs 1(a) and (b) accordingly. The number of operations required to perform the forward Sign Haar Transform h for a single element of set $R_2^{2^n}$ and the inverse Sign Haar Transform h^{-1} for a single element of set $R_{2(h)}^{2^n}$ and for a transform matrix of order $N=2^n$ is equal to $4(2^n-1)$.

Besides calculation of both Sign Haar transforms by using fast flow diagrams similar to those of the Fast Haar transform, Sign Haar spectra can be calculated directly from recursive definitions that involve data and transform domain variables.

The following symbols are used: Let

$$\mathbf{x}_n=[x_n, x_{n-1}, \ldots, x_i, \ldots, x_2, x_1]$$

$$\boldsymbol{\omega}_n=[\omega_n, \omega_{n-1}, \ldots, \omega_i, \ldots, \omega_2, \omega_1]$$

be n-tuples over GF(2). The symbol x_i stands for a data variable, and ω_i for a transform domain variable; i is an integer and $1 \le i \le n$. Let

$$F = [F_0, F_1, \ldots, F_i, \ldots, F_{2^n-2}, F_{2^n-1}]$$

be a ternary vector. For example, it can be the S-coded truth vector of $f: R_1^n \rightarrow R_2$ where the value of F_u $(0 \le u \le 2^{n-1})$ is given by $F(x_n)$ when

$$\sum_{i=1}^{n} x_i 2^i = u$$

Let

$$H_F = [h_0, h_1, \ldots, h_i, \ldots, h_{2^n-2}, h_{2^n-1}]$$

be the vector corresponding to the Sign Haar Transform of F. The value of h_u $(0 \le u \le 2^{n-1})$ is given by $H_F(\omega)$ when

$$\sum_{i=1}^{n} \omega_i 2^i = u$$

Let O_i represent the vector of i zeros, $1 \le i \le n$. Let the symbol $\oplus_c$ represent cyclic addition, let the symbol $\oplus_d$ represent dyadic addition, and let the symbol $\wedge$ represent bit-by-bit logical AND. When the above operations are applied to two vectors A_l and B_v, $1 \le l \le v$, where l and v are two different integer numbers, they result in the vector C_v of the length v. Only l elements of B_v and all elements of A_l are manipulated, the remaining $(v-l)$ elements of the resulting vector C_v are not

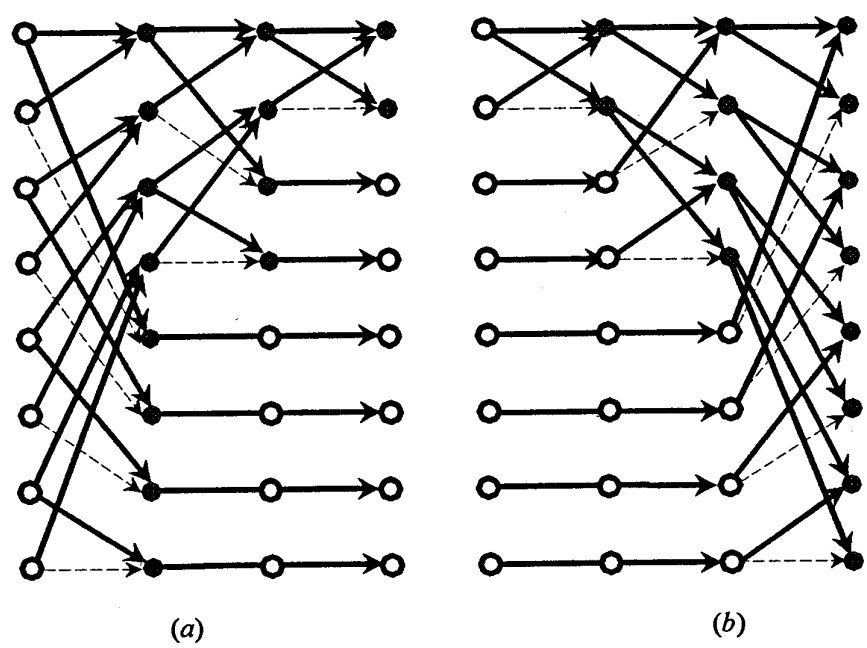

Figure 1. Butterfly diagram for: (*a*) forward and (*b*) inverse Sign Haar transform, $n=3$. ● sign function, ○ lack of any operation, solid and dotted lines represent addition and subtraction, respectively.

affected by the applied operation and are simply the same as the elements of the vector $\boldsymbol{B}_v$ between positions v and $l+1$.

Definition 4

An invertible forward Sign Haar Transform h is

$$h(\boldsymbol{O}_n \oplus_{\mathrm{d}} \omega_1) = \operatorname{sign} \sum_{x_n=0}^{1} \left[\operatorname{sign} \sum_{x_{n-1}=0}^{1} \left[\cdots \operatorname{sign} \sum_{x_1=0}^{1} \left\{ (-1)^{x_n \omega_1} f(\boldsymbol{x}_n) \right\} \cdots \right] \right] \tag{1}$$

$$h(\boldsymbol{O}_n \oplus_{\mathrm{d}} \boldsymbol{\omega}_i \oplus_{\mathrm{d}} 2^i) = \operatorname{sign} \sum_{x_{n-i}=0}^{1} \left[\operatorname{sign} \sum_{x_{n-i-1}=0}^{1} \left[\cdots \operatorname{sign} \sum_{x_1=0}^{1} \left\{ (-1)^{x_{n-1}} \right.\right.\right.$$

$$\left.\left.\left. f\left\{ \left[(\boldsymbol{O}_n \oplus_{\mathrm{d}} \boldsymbol{\omega}_i) \oplus_{\mathrm{c}} (n-i) \right] \oplus_{\mathrm{d}} \boldsymbol{x}_{n-i} \right\} \right\} \cdots \right] \right] \tag{2}$$

The inverse Transform is

$$f(\boldsymbol{x}_n) = \operatorname{sign} \left\{ (-1)^{x_1} h \left\{ \left[(\boldsymbol{O}_1 \wedge \boldsymbol{x}_n) \oplus_{\mathrm{c}} 1 \right] \oplus_{\mathrm{d}} 2^{n-1} \right\} + \operatorname{sign} \left\{ (-1)^{x_2} \right.\right.$$

$$h \left\{ \left[(\boldsymbol{O}_2 \wedge \boldsymbol{x}_n) \oplus_{\mathrm{c}} 2 \right] \oplus_{\mathrm{d}} 2^{n-2} \right\} + \cdots + \operatorname{sign} \left\{ (-1)^{x_i} h \left\{ \left[(\boldsymbol{O}_i \wedge \boldsymbol{x}_n) \oplus_{\mathrm{c}} i \right] \right.\right.$$

$$\left.\left. \oplus_{\mathrm{d}} 2^{n-i} \right\} + \cdots + \operatorname{sign} \left\{ (-1)^{x_{n-1}} h \left\{ \left[(\boldsymbol{O}_{n-1} \wedge \boldsymbol{x}_n) \oplus_{\mathrm{c}} (n-1) \right] \oplus_{\mathrm{d}} 2 \right\} \right.\right.$$

$$\left.\left.\left. + \operatorname{sign} \left[\sum_{\omega_1=0}^{1} (-1)^{x_n \omega_1} h(\boldsymbol{O}_n \oplus_{\mathrm{d}} \omega_1) \right] \right\} \cdots \right\} \right\} \tag{3}$$

In (1)-(3)

$$\operatorname{sign} z = \begin{cases} -1, & z<0 \\ 0, & z=0 \\ +1, & z>0 \end{cases}$$

In (2) and (3), $1 \le i \le n$. Let us show the mutual relations in the definitions of the forward and inverse Transforms h for the ith ω_i and first transform variable ω_1. For the forward Transform when $i \to 0$, (2) is

$$h(\boldsymbol{O}_n \oplus_{\mathrm{d}} \boldsymbol{\omega}_i \oplus_{\mathrm{d}} 2^i) = h(\boldsymbol{O}_n \oplus_{\mathrm{d}} \boldsymbol{\omega}_0 \oplus_{\mathrm{d}} 2^0) = h(\boldsymbol{O}_n \oplus_{\mathrm{d}} 1) = h(\boldsymbol{O}_n \oplus_{\mathrm{d}} \omega_1) \text{ when } \omega_1 = 1$$

Hence, for this condition, (1) has been derived. For the inverse Transform, an ith element

$$\operatorname{sign} \{ (-1)^{x_i} h \{ [(\boldsymbol{O}_i \wedge \boldsymbol{x}_n) \oplus_{\mathrm{c}} i] \oplus_{\mathrm{d}} 2^{n-i} \}, \text{ when } i \to n$$

approaches

$$\begin{aligned}\operatorname{sign}\{(-1)^{x_n}h\{[(O_n \wedge x_n)\oplus_c n]\oplus_d 2^{n-n}\} &= \operatorname{sign}\{(-1)^{x_n}h\{[(O_n \oplus_c n]\oplus_d 1\} \\ &= \operatorname{sign}\{(-1)^{x_n}h[(O_n \oplus_d 1] \\ &= \operatorname{sign}(-1)^{x_n\omega_1}h(O_n \oplus_d \omega_1), \quad \text{when } \omega_1 = 1\end{aligned}$$

Hence, the nth element of the recursive definition in (3) has been derived.

The Sign Haar Transform presents a mapping of the set R_1 or R_2 onto R_2. Owing to its unique mapping property, the new transform space of similar ternary values could be easily developed by simply applying the Sign Haar Transform χ times onto the ternary truth column vector F such that each time a new transform space is developed. The overall transform is named the Sign Haar-χ Transform. In general, if n is the number of variables of binary/ternary function, there are altogether a maximum of 3^{2^n} different Sign Haar Transform spaces, denoted as a Sign Haar-χ Transform with $1 \le \chi \le 3^{2^n}$, where with $\chi = 1$ the transform yields the original Sign Haar Transform (Falkowski and Rahardja 1994). This property does not show an error-correcting capability, but it allows the transform to be used conveniently in secured communication system. Application of the Sign Haar Transform to streams of binary/ternary messages will cause the transmitted signal to be isolated from all receivers other than the one with the inverse Sign Haar Transform.

3. Calculation of Sign Haar Transform by matrix approach

The Sign Haar Transform may be evaluated using a matrix approach. It is also possible to evaluate a single spectral coefficient of the Sign Haar Transform without the need to calculate the whole spectrum.

Definition 5

Let T_n and S_n be $2^n \times 2^n$ forward and inverse Haar Transform matrices (Stojic *et al.* 1993, Yaroslavsky 1985, Zalmanzon 1989). Then

$$\begin{aligned}T_n &= [t_0, t_1, \cdots, t_i, \cdots, t_{2^n-1},]^T = S_n^{-1} \\ &= [[s_0, s_1, \cdots, s_i, \cdots, s_{2^n-1}]^T]^{-1}, \quad \text{where } 0 \le i \le 2^n - 1\end{aligned} \tag{4}$$

Definition 6

Let $A = [a_0, a_1, \cdots, a_{2^n-1}]$ be a 1×2^n row vector and let $B = [b_0, b_1, \cdots, b_{2^n-1}]$ be a $2^n \times 1$ column vector. The vector product $A * B$ is a 1×2^n row vector with the elements derived from component-wise multiplication:

$$A * B = [a_0 b_0, a_1 b_1, \cdots, a_{2^n-1} b_{2^n-1}] \tag{5}$$

Definition 7

Let A be a 1×2^n row vector whose entries are $[a_i]$. The sign modulo function $\lceil A \rceil = a$ is a scalar where the elements in A are summed in pairs in the form of a binary tree summation, and the tree is evaluated from the bottom up.

Property 1

Let

$$F=[F_0,F_1,\cdots,F_i,\cdots,F_{2^n-1}] \quad H_F=[h_0,h_1,\cdots,h_i,\cdots,h_{2^n-1}]$$

define the ternary vector and its Sign Haar spectra coefficients. Then, $h_i=\lceil t_i * F\rceil$ and $F_i=\lceil s_i * H_F\rceil$.

Example 1

Let $n=2$, and the ternary vector $F=[-,-,+,-]$. From Definition 5

$$T_n=[(++++),(++--),(+-00),(00+-)]^T$$

By Property 1

$$\begin{aligned}
h_0 &= \lceil (++++)*(--+-)^T\rceil = \lceil (--+-)\rceil = \lceil (-0)\rceil = - \\
h_1 &= \lceil (++--)*(--+-)^T\rceil = \lceil (---+)\rceil = \lceil (-0)\rceil = - \\
h_2 &= \lceil (+-00)*(--+-)^T\rceil = \lceil (-+00)\rceil = \lceil (00)\rceil = 0 \\
h_3 &= \lceil (00+-)*(--+-)^T\rceil = \lceil (00++)\rceil = \lceil (0+)\rceil = +
\end{aligned}$$

4. TAFSK modulation technique

The digital modulation technique responsible for carrying information in Sign Haar spectra is ternary amplitude frequency shift keying. In this signalling a ternary $+1$ is transmitted by a radio frequency (RF) pulse of carrier $\cos\omega_1 t$, a ternary -1 is transmitted by an RF pulse of carrier $\cos\omega_2 t$, and a 0 corresponds to no RF pulse. The technique combines binary amplitude shift keying and binary frequency shift keying for the ternary case. The power spectral density (PSD) of the resultant signalling is given by

$$S(\omega)=\tfrac{1}{2}[A_1(\omega+\omega_1)+A_1(\omega-\omega_1)+A_1(\omega+\omega_2)+A_1(\omega-\omega_2)] \tag{6}$$

where

$$A_1(\omega)=\tfrac{2}{9}T_0\,\mathrm{sinc}^2\left(\frac{\omega T_0}{2\pi}\right)\left[1+\frac{\pi}{T_0}\sum_{m=-\infty}^{\infty}\delta\left(\omega-\frac{2\pi m}{T_0}\right)\right]$$

Proof

Let the Sign Haar Transform of binary/ternary data streams be represented by

$$A(t)=\sum_{k=-\infty}^{\infty} a_k p(t-kT_0)=A_1(t)+A_2(t)$$

where $p(t)$ represents a full rectangular pulse which repeats every T_0 seconds, and it is assumed that a_k is equally likely to be $+1$, 0 or -1, i.e. $P(a_k=1)=P(a_k=-1)=P(a_k=0)=\frac{1}{3}$. Furthermore

$$A_1(t)=\sum_{k=-\infty}^{\infty} a_k^{\langle 1\rangle}p(t-kT_0) \text{ and } A_2(t)=\sum_{k=-\infty}^{\infty} a_k^{\langle -1\rangle}p(t-kT_0)$$

with $P(a_k^{\langle 1\rangle}=1)=P(a_k^{\langle -1\rangle}=-1)=\frac{1}{3}$ and $P(a_k^{\langle 1\rangle}=0)=P(a_k^{\langle -1\rangle}=0)=\frac{2}{3}$. The PSD of ON–OFF signalling (Filippov and Zinoviev 1966) is

$$A_0(\omega)=\frac{|P(\omega)|^2}{T_0}\left[\sum_{m=-\infty}^{\infty} R_m \mathrm{e}^{-jm\omega T_0}\right]$$

where R_m is the coefficient of the time-autocorrelation function of the signalling and $j=\sqrt{-1}$. Therefore the PSD of $A_1(t)$ is $A_1(\omega)=A_0(\omega)$, with

$$R_0=\lim_{N_T\to\infty}\frac{1}{N_T}\sum_{k=1}^{N_T}(a_k^{\langle 1\rangle})^2=\tfrac{1}{3}$$

$$\text{and}\quad R_m=\lim_{N_T\to\infty}\frac{1}{N_T}\sum_{k=1}^{N_T}a_k^{\langle 1\rangle}a_{k+m}^{\langle 1\rangle}=\tfrac{1}{9},\quad \text{if } m\neq 0$$

Since

$$P(\omega)=T_0\,\mathrm{sinc}\left(\frac{\omega T_0}{2\pi}\right)$$

and using

$$\sum_{m=-\infty}^{\infty}\mathrm{e}^{-jm\omega T_0}=\frac{2\pi}{T_0}\sum_{m=-\infty}^{\infty}\delta\left(\omega-\frac{2\pi m}{T_0}\right)$$

then

$$A_1(\omega)=\tfrac{2}{9}T_0\,\mathrm{sinc}^2\left(\frac{\omega T_0}{2\pi}\right)\left[1+\frac{\pi}{T_0}\sum_{m=-\infty}^{\infty}\delta\left(\omega-\frac{2\pi m}{T_0}\right)\right]$$

Since $(a_k^{\langle 1\rangle})^2=(a_k^{\langle -1\rangle})^2$ and $a_k^{\langle 1\rangle}a_{k+m}^{\langle 1\rangle}=a_k^{\langle -1\rangle}a_{k+m}^{\langle -1\rangle}$, therefore $A_2(\omega)=A_1(\omega)$. Using the frequency shifting property and since

$$s(t)=A_1(t)\cos\omega_1 t+A_2(t)\cos\omega_2 t$$

the proof of (6) is complete. □

For $\omega_2>\omega_1$, if $\omega_2-\omega_1=2\omega_0$ then the transmission bandwidth of TAFSK signalling is $4f_0$ (where $f_0=1/T_0$ is the clock frequency).

5. System overview

Figure 2 shows the block diagram of a TAFSK transmitter. The continuous streams of binary/tenary data are converted to parallel words of length N by means of a serial–parallel converter. The Sign Haar-χ Transform is applied to each word before converting back to the format of serial data. The output signal V of the parallel–serial converter controls the output frequency of the voltage-controlled oscillator, and both outputs are fed together into the mixer. The output of the mixer is TAFSK signalling. The output of the oscillator is mathematically given by

$$\mathrm{VCO}=V_0\cos[2\pi(f_c+\mathrm{V}f_m)t] \tag{7}$$

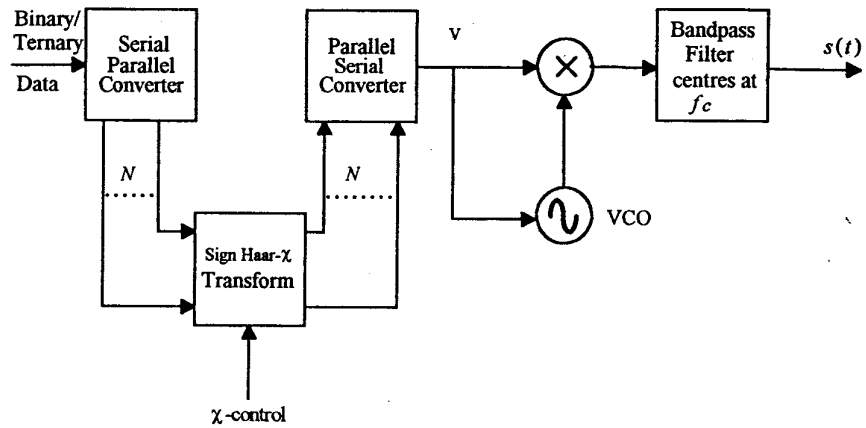

Figure 2. Block diagram of TAFSK transmitter.

where $V \in \{-1, 0, 1\}$ and V_0 is an arbitrary amplitude. If $f_m = f_0$, then the resultant transmission bandwidth will be $4f_0$, and $f_c + f_0 = f_2, f_c - f_0 = f_1$.

Figure 3 shows a block diagram of a TAFSK receiver. The incoming noisy RF signal is bandpass filtered centred at frequency f_c. The bandpass filters centred at f_2 and f_1 are matched to the two RF pulses corresponding to ternary logic of -1 and $+1$ accordingly. The outputs of the two matched filters are detected by two envelope detectors. The envelope detector is sampled at $t = T_0$ to make the ternary decision of -1 or 0 and 1 or 0 by negative and positive threshold devices, respectively. The output of summer is ternary, which is fed to a serial–parallel converter, the inverse Sign Haar-χ Transform block and parallel–serial converter to extract the original message.

The proposed non-coherent system is the simplest implementation of a ternary communication system. Other possibilities include the complicated M-ARY communication systems. It is obvious that the Sign Haar Transform provides security to

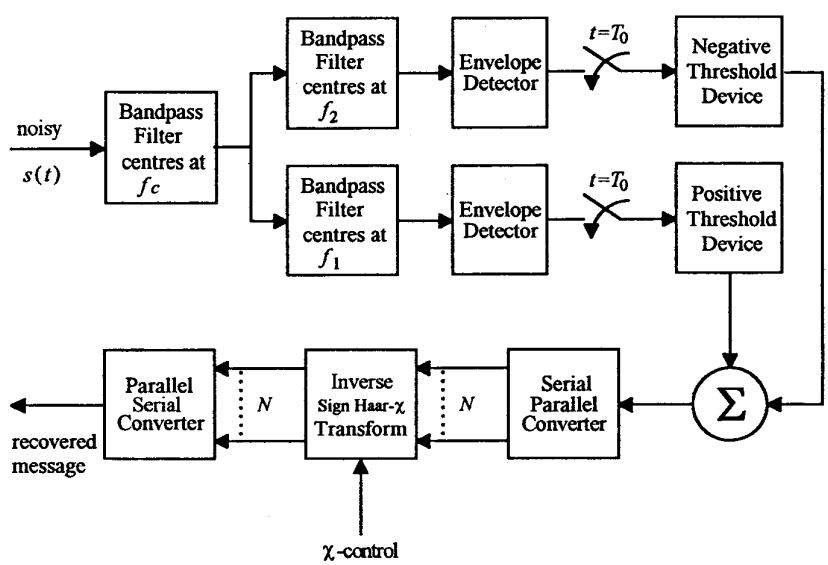

Figure 3. Block diagram of TAFSK receiver.

information data. If χ is varied for each word transformed in a manner transparent to a friendly receiver, the level of security in the communication system will be further enhanced.

6. Conclusion

The application of the Sign Haar Transform in ternary communication system is considered. A non-coherent system to implement the ternary system is proposed and analysed. The addition of the Sign Haar Transform provides security in the digital communication system. The level of security is easily adjustable by controlling χ, which corresponds to the Sign Haar-χ Transform. Another possibility to increase the security of the digital communication system is the usage of the Sign Haar-χ Walsh-γ Transform (Falkowski and Rahardja 1995). Though the latter transform is more computationally expensive, it provides better cryptographic properties obtained by its design.

Among all the existing digital quantized transforms, the Sign Haar Transform is the most computationally effective, in terms of both processing time and memory requirements. When a fast flow diagram is directly implemented in software, there is no need to keep the original data, and each consecutive butterfly requires a geometrically smaller number of operations on the transformed data. Each time, 2^n binary/ternary data need to be stored in the memory. The Sign Haar-χ Transform block may also be implemented as a parallel dedicated processor.

References

Falkowski, B. J., and Rahardja, S., 1994, Sign Haar Transform. *Proceedings of the 27th IEEE International Symposium on Circuits and Systems*, London, U.K., pp. 161–164; 1995, Novel quantized transform for ternary systems. *Proceedings of the 25th IEEE International Symposium on Multiple-valued Logic*, Bloomington, Indiana, U.S.A., pp. 117–122.

Filippov, L. I., and Zinoviev, A. L., 1966, *Methods of Analytic Expression of Radio Communication Signals* (Moscow: Vysshaia Shkola), in Russian.

Stojic, M. R., Stankovic, M. S., and Stankovic, R. S., 1993, *Discrete Transforms and Their Application* (Beograd: Nauka), in Serbian.

Yaroslavsky, L. P., 1985, *Digital Picture Processing—An Introduction* (Berlin: Springer-Verlag).

Zalmanzon, L. A., 1989, *Fourier, Walsh and Haar Transforms and Their Application in Control, Communication and Other Fields* (Moscow: Nauka), in Russian.